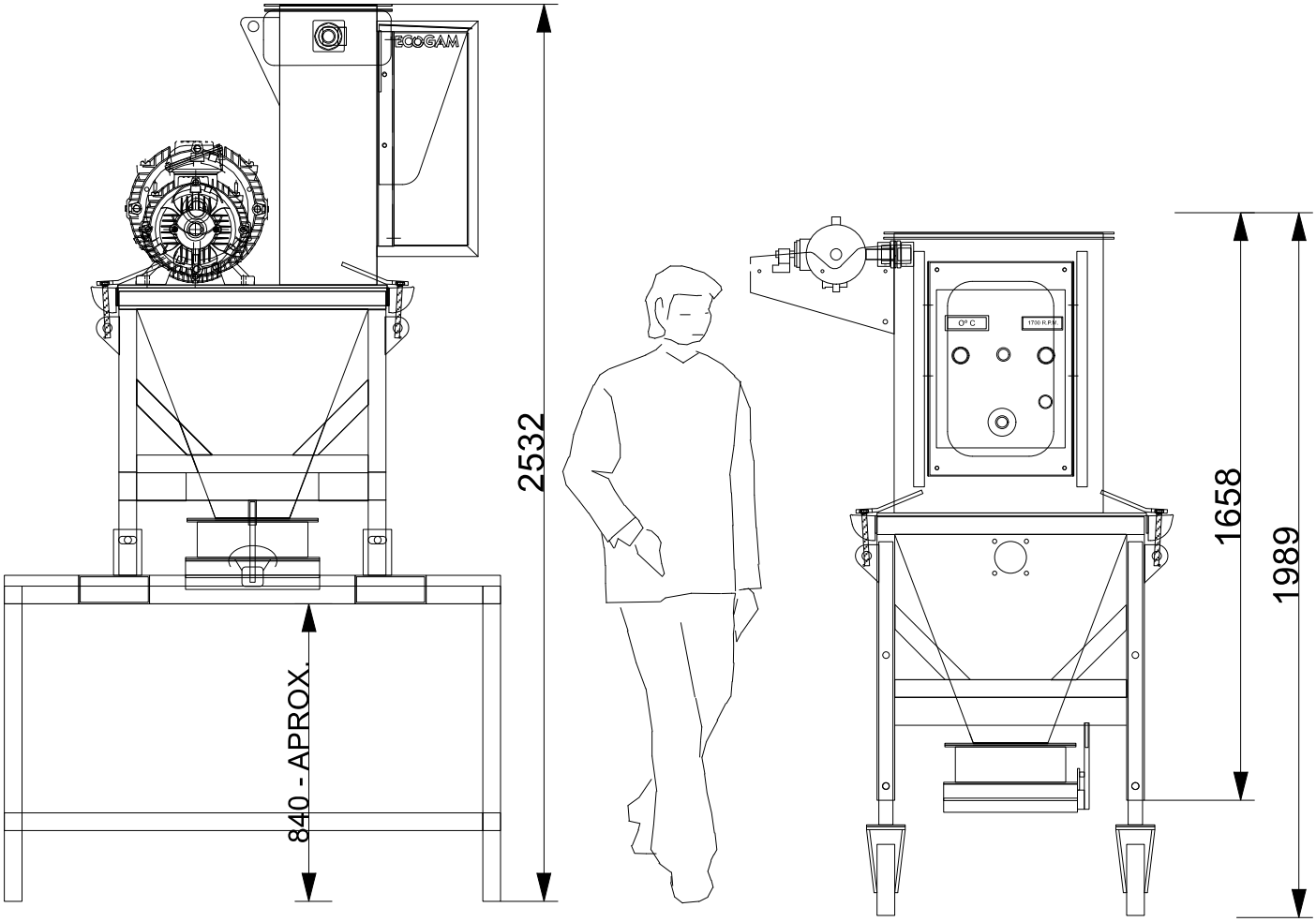

ECOGAM			Escale 1:20
			ASPICOMPACT ss **130 LITERS**